GlobalCorp

The Proven Market Leader

Global Corp offers a full line of landing gear and gas-turbine engines for a variety of applications. Covering a range from 400 to 40,000 horsepower. Our engines power both marine vehicles as well as aircraft.The LV1200 is the most recent commercial product to be developed at Global Corp. This landing gear covers the has been designed specifically for 200-passenger aircraft. It is currently offered on the AirShuttle K218, part of the successful K200 aircraft family and will enter service In the spring of 2006.

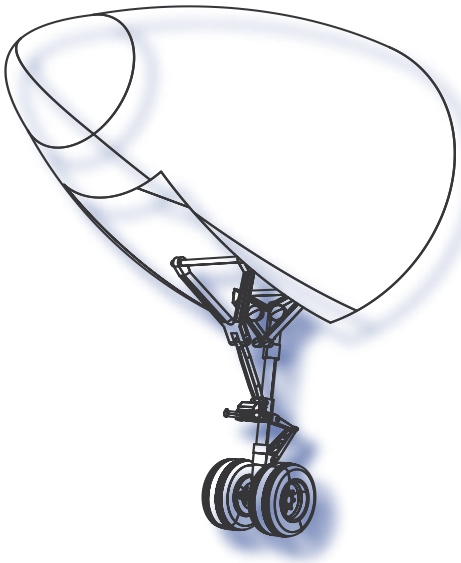

The LV1200 builds on proven technology gleaned from other Global Corp advanced landing gear programs to deliver the lowest cost of ownership for 200-passenger aircraft operators. Global Corp has incorporated technological advances in the LV1200 that enable a reduction in parts count. With fewer parts, the landing gear has a lower maintenance cost.

The LV1200 meets all current and anticipated stress and operability requirements to provide longevity and high residual value. For airlines contemplating the future acquisition of new 200-passenger aircraft.

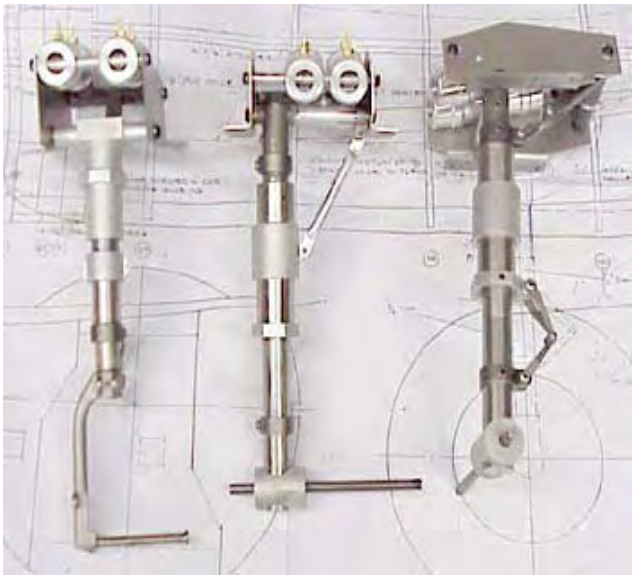

Our test samples are put through the most extensive cycle of operations before manufacturing for certification

Change View

Copyright © 2005 Adobe Systems Incorporated. All rights reserved.