LV 3200 Project Plan

ID	Task Name
1	**LV 3200 Turbine**
2	**Planning Phase**
3	**Planning**
4	Review Plan
5	Incorporate Comments
6	Sign off
7	PRD Complete
8	Revise during RTI
9	Sign off
10	PRD Final
11	Create MRD/Go-To-Market Plan
12	Platform Spec - Draft
13	Quality Objective Plan - Draft
14	Configuration / Lab Plan - Draft
15	Cal CPM
16	Project Plan - Draft
17	Planning Review
18	Planning Phase Complete
19	**RTI Phase**
20	*Functional Specs - Drafts*
21	*Tasking in Feature Database*
22	*Spec Sign Off Meetings*
23	Bug Scrub (Prio A-C)
24	Quality Plan - Draft
25	Support Plan - Draft
26	Fullfillment Plan - Draft
27	OEM Plan - Draft
28	Architecture Spec - Draft
29	Upgrade Plan - Draft
30	PRD - Final

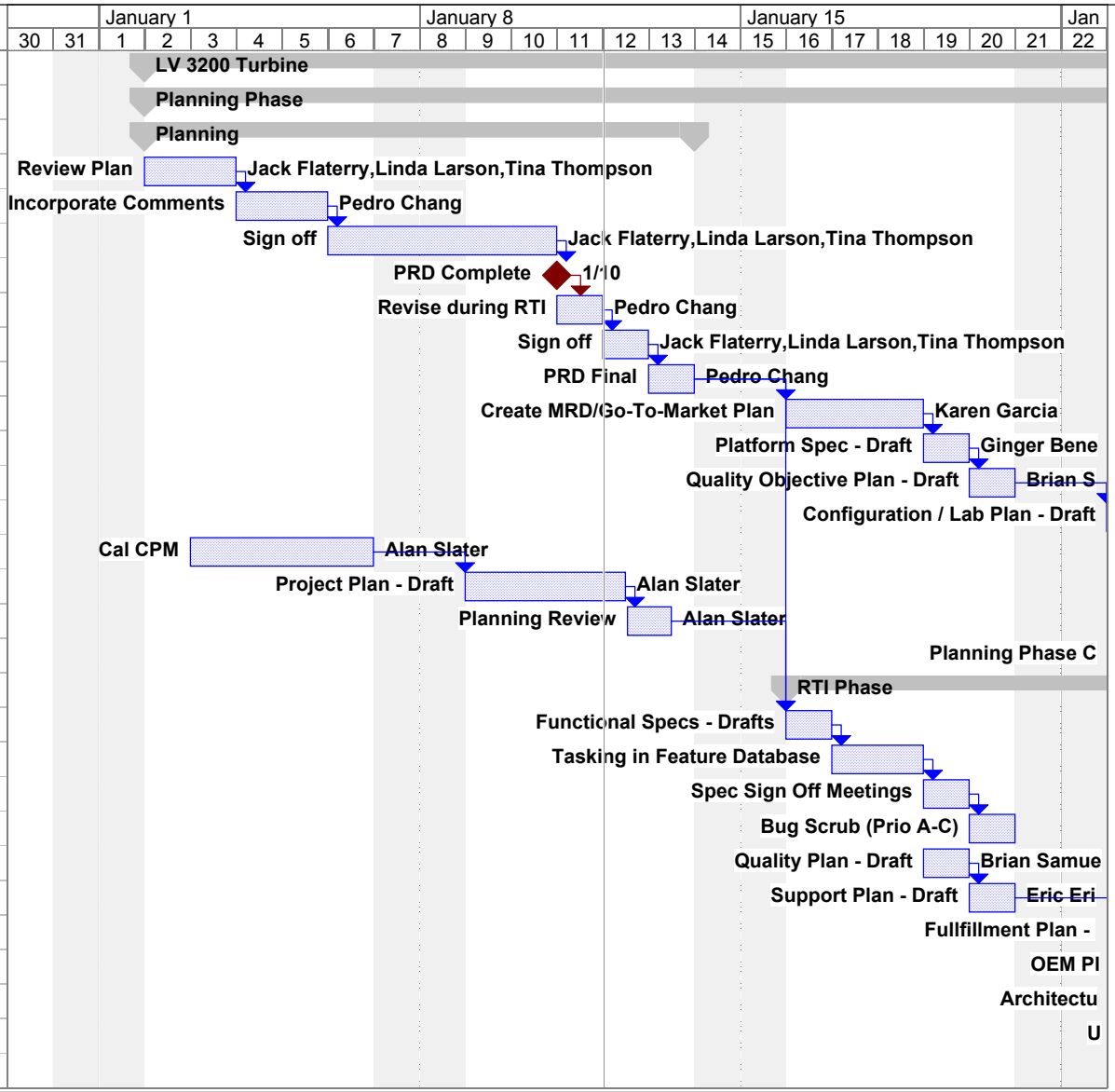

Project: fun
Date: Thu 1/12/06

Task		Milestone		External Tasks	
Split		Summary		External Milestone	
Progress		Project Summary		Deadline	

	A	B	C
1			
2		**Landing Gear Brake Assy. Project Prototype**	
3			
4			
5		**Product Group: Brake Assemby**	**Testing Proc.**
6		Main Fan Aligner (1267)	
7		Compressor Multi Stage Clearance (3452)	90329314
8		HS Code:	90329111
9		Trademark:	Global
10		Model:	6010
11			
12		**Product Description**	**Partno.**
13		1.Technische Angaben	1389767
14		2.Non-wire 8 sensors	9567278
15		3.Data storing and repairing graphic display	5142360
16		4.2-way input valve	3508203
17		5.No run-out compensation	NA
18		6.Sensitivity reaches to 0.01	NA
19		Power supply :220V1HP	483582
20		Pitch :+4degree -- -4degree (0.01degree)	NA
21		Camber :+10degree-- -10degre(0.01degree)	3821026
22		Caster :+15degree-- -15degree(0.01degree)	8516402
23		Kingpin inclinable :+15degree-- -15degree(0.01degree)	366963
24		Set back :+5degree-- -5degree (0.01degree)	NA
25		Incl angle :+25degree-- -25degree(0.01degree)	NA
26		Set back :+5degree -- -5degree(0.01degree)	NA
27			NA

GlobalCorp

The Proven Market Leader

Global Corp offers a full line of landing gear and gas-turbine engines for a variety of applications. Covering a range from 400 to 40,000 horsepower. Our engines power both marine vehicles as well as aircraft.The LV1200 is the most recent commercial product to be developed at Global Corp. This landing gear covers the has been designed specifically for 200-passenger aircraft. It is currently offered on the AirShuttle K218, part of the successful K200 aircraft family and will enter service In the spring of 2006.

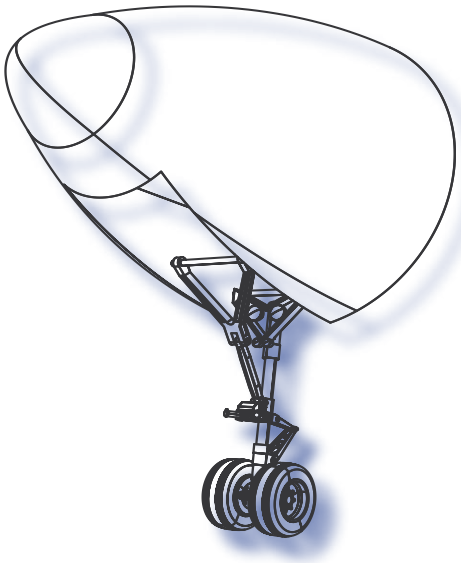

The LV1200 builds on proven technology gleaned from other Global Corp advanced landing gear programs to deliver the lowest cost of ownership for 200-passenger aircraft operators. Global Corp has incorporated technological advances in the LV1200 that enable a reduction in parts count. With fewer parts, the landing gear has a lower maintenance cost.

The LV1200 meets all current and anticipated stress and operability requirements to provide longevity and high residual value. For airlines contemplating the future acquisition of new 200-passenger aircraft.

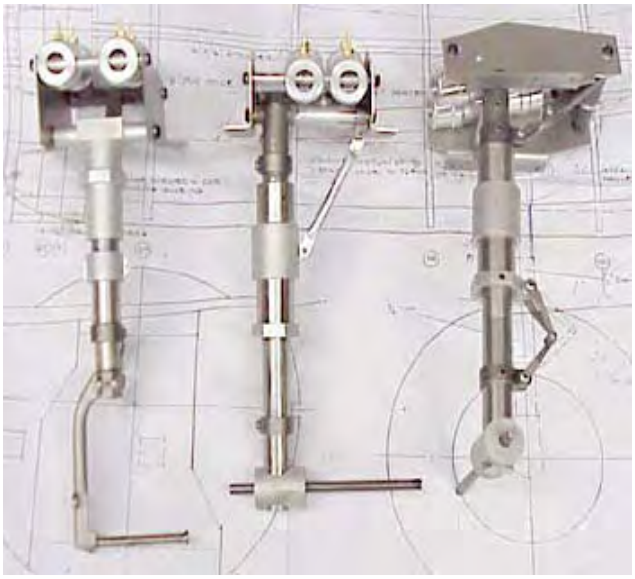

Our test samples are put through the most extensive cycle of operations before manufacturing for certification

Change View

Copyright © 2005 Adobe Systems Incorporated. All rights reserved.